# FUEL SUPPLY

## CONTENTS

**FUEL TANK** ..... 2
Fuel Pump Module ..... 4

# FUEL TANK

## REMOVAL AND INSTALLATION

**Pre-removal Operation**
- Fuel Draining
- Reduce the Inner Pressure of Fuel Line and Hose (Refer to GROUP 13 – On-vehicle Service.)
- Center Exhaust Pipe Removal (Refer to GROUP 15.)
- Rear Propeller Shaft Removal (Refer to GROUP 25.)

**Post-installation Operation**
- Fuel Supplying.
- Checking for Fuel Leaks
- Rear Propeller Shaft Installation (Refer to GROUP 25.)
- Center Exhaust Pipe Installation (Refer to GROUP 15.)

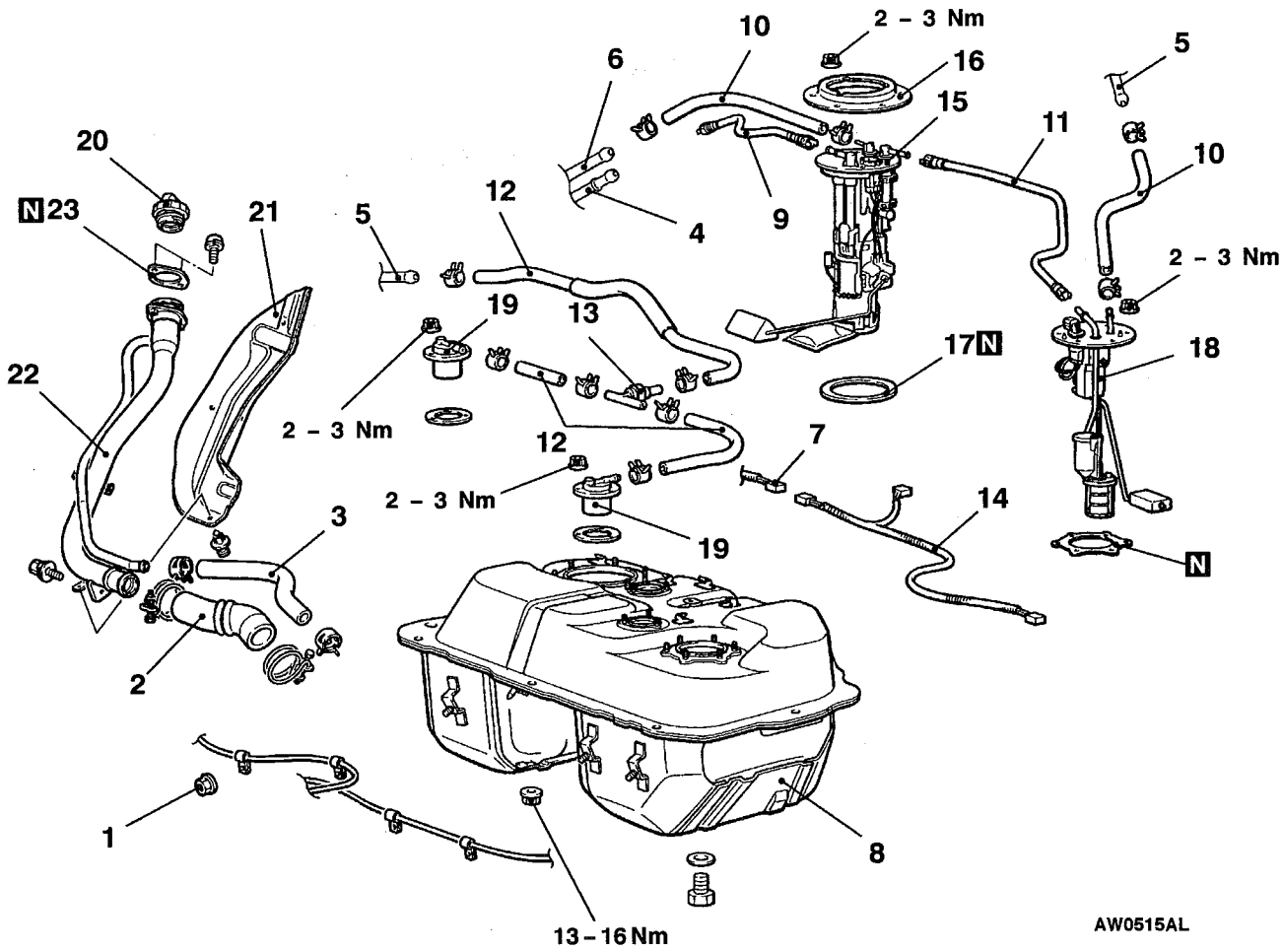


**Removal steps**

1. Parking brake cable clamp mounting nut
2. Filler hose
3. Leveling hose
▶A◀ 4. High pressure tube connection
5. Vapour hose connection
6. Return hose connection
7. Harness connector connection
8. Fuel tank assembly
▶A◀ 9. High pressure tube
10. Return hose
▶A◀ 11. Suction tube
12. Vapour hose
13. Fuel check valve
14. Fuel tank harness
15. Fuel pump module
16. Retainer plate
17. Packing
18. Pipe and gauge assembly
19. Valve assembly
20. Fuel filler cap
21. Filler neck protector
22. Filler neck assembly
23. Packing

## INSTALLATION SERVICE POINT

**▶A◀ SUCTION TUBE/HIGH PRESSURE TUBE CONNECTION**

**Caution**
**After the connection, pull the high pressure tube and suction tube gently in the direction of removal to check that they are firmly connected.**

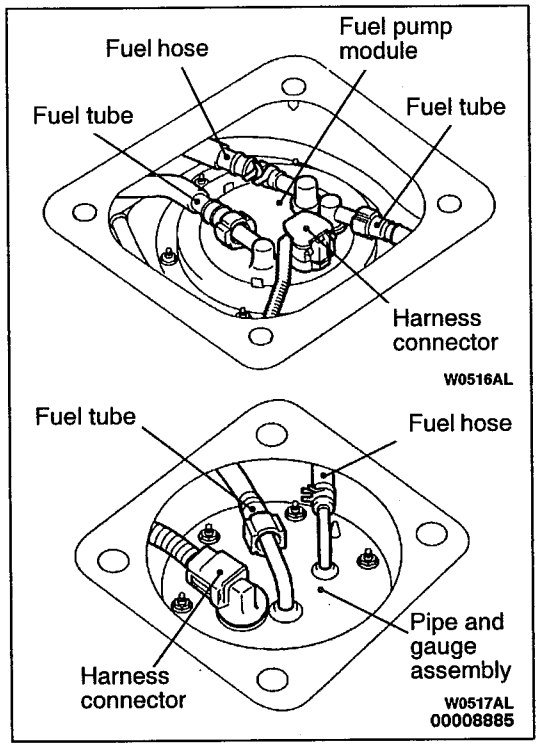


## INSPECTION

### FUEL PUMP MODULE/PIPE AND GAUGE ASSEMBLY REPLACEMENT

1. Remove the rear seat cushion.
2. Remove the service hole cover.
3. Disconnect the harness connector, fuel hose and tube.
4. Unscrew the mounting nuts, and then remove the pipe and gauge assembly and fuel pump module.
5. Install the pipe and gauge assembly and fuel pump module. Tighten the mounting nuts to the specified torque.

   **Specified torque: 2 – 3 Nm**

6. Connect the fuel hose, fuel tube and harness connector.

   **Caution**
   **After the connection, pull the high pressure tube and suction tube gently in the direction of removal to check that they are firmly connected.**

7. Install the service hole cover.
8. Install the rear seat cushion.

### FUEL GAUGE UNIT CHECK

Refer to GROUP 54 – Combination Meter.

## DISASSEMBLY AND REASSEMBLY

### FUEL PUMP MODULE

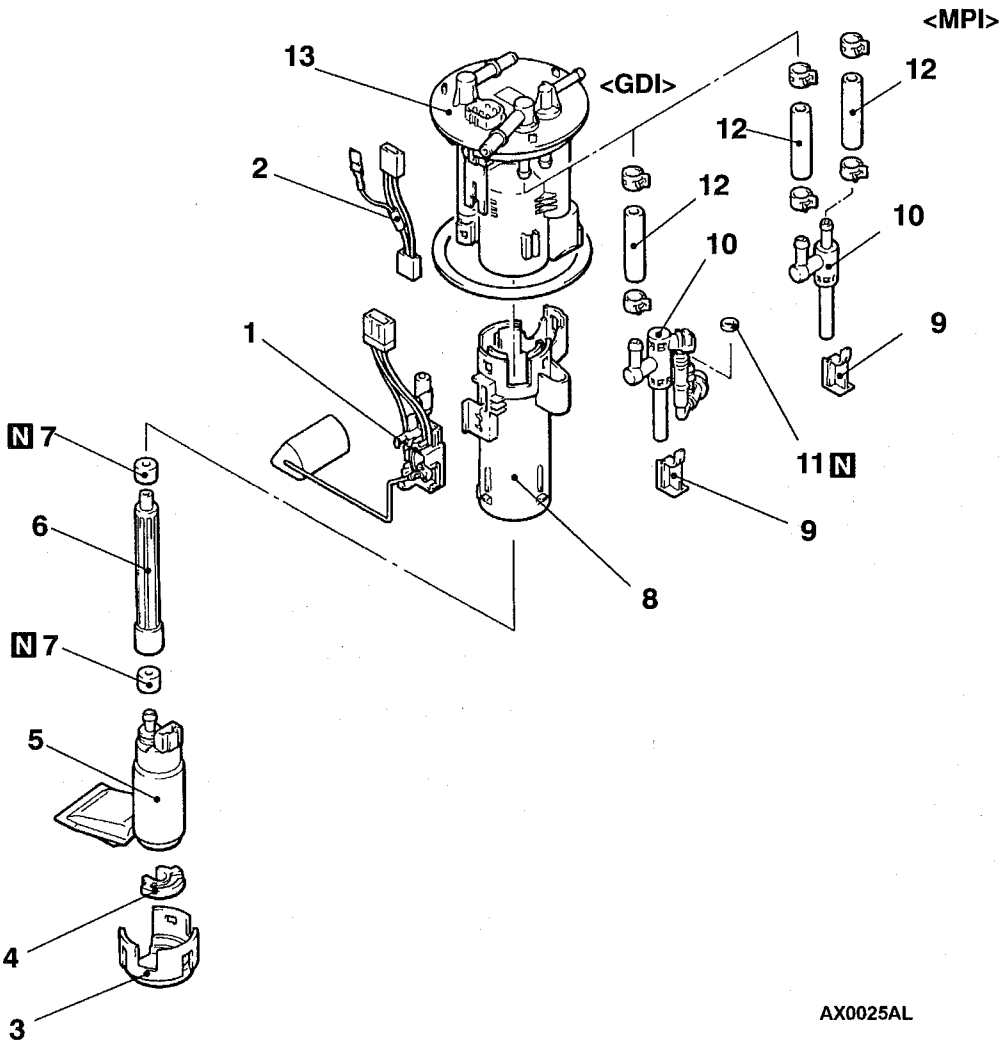


**Disassembly steps**

1. Fuel gauge unit
2. Gauge harness
3. Bracket
4. Cushion
5. Fuel pump (low-pressure)
6. Fuel tube
▶A◀ 7. Grommet
8. Housing
9. Stopper
10. Fuel pressure regulator (low-pressure) and assist pump assembly <GDI> or assist pump <MPI>
▶A◀ 11. O-ring
12. Fuel hose
13. Fuel filter assembly

## REASSEMBLY SERVICE POINT

### ▶A◀ O-RING/GROMMET INSTALLATION

Apply a fuel to O-ring and grommet before installing them, to prevent them from being damaged or twisted.